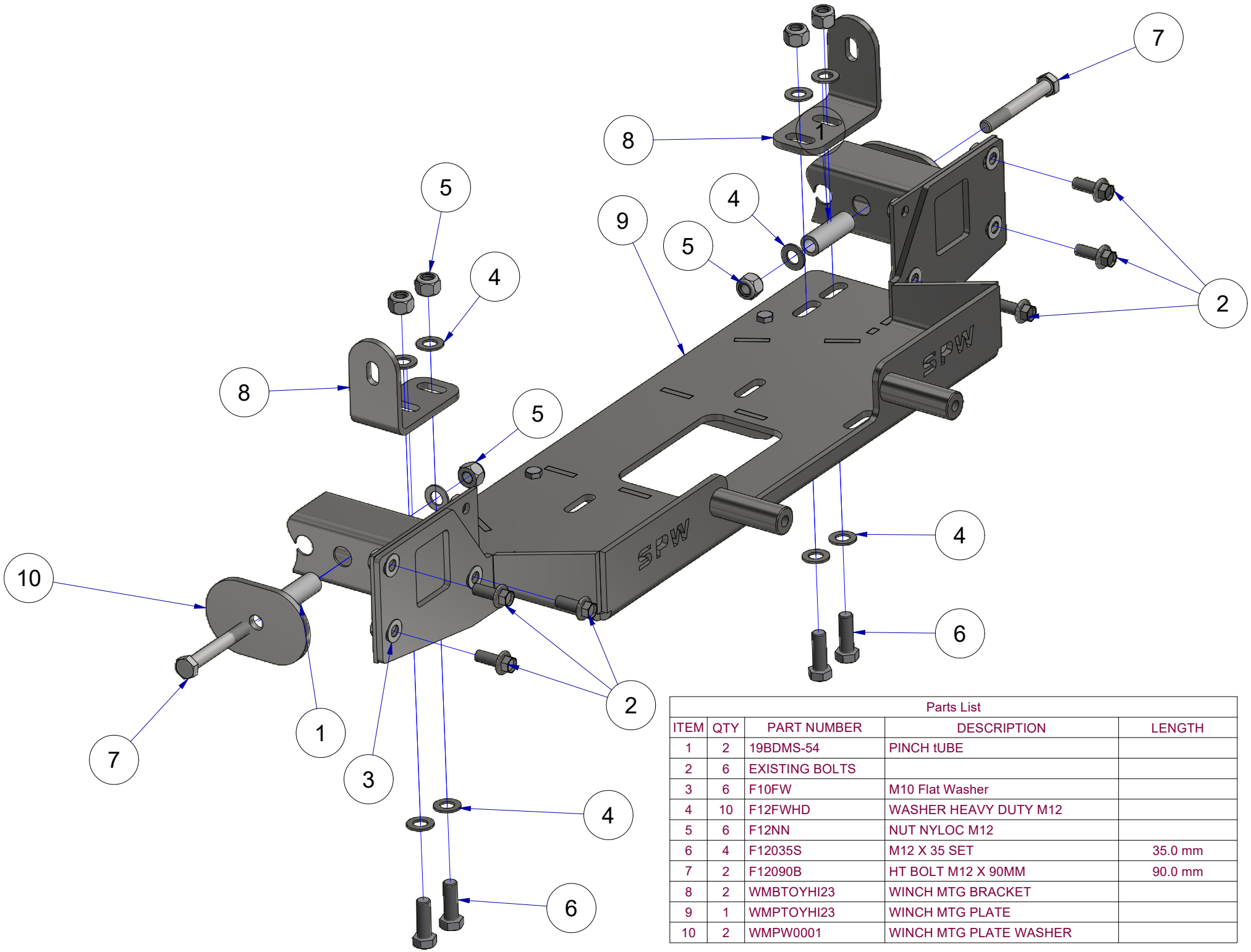

Parts List				
ITEM	QTY	PART NUMBER	DESCRIPTION	LENGTH
1	2	19BDMS-54	PINCH tUBE	
2	6	EXISTING BOLTS		
3	6	F10FW	M10 Flat Washer	
4	10	F12FWHD	WASHER HEAVY DUTY M12	
5	6	F12NN	NUT NYLOC M12	
6	4	F12035S	M12 X 35 SET	35.0 mm
7	2	F12090B	HT BOLT M12 X 90MM	90.0 mm
8	2	WMBTOYHI23	WINCH MTG BRACKET	
9	1	WMPTOYHI23	WINCH MTG PLATE	
10	2	WMPW0001	WINCH MTG PLATE WASHER	